Retinac

"Revolutionizing diabetic retinopathy screening"

Summary

Diabetic retinopathy (DR), **the leading cause of blindness** in working-aged adults, poses a risk to everyone with diabetes, but many individuals can't feel or notice symptoms until it is too late. **95% of vision loss from DR is preventable** with early detection and timely treatment. Many neglect regular eye exams because they are unaware of preventative DR care, are overwhelmed with other complications of diabetes, and may have limited access to eye care services. Aiming to **increase DR screening** rates and decrease DR-related blindness, our product is a screening tool for VEGF, an inflammatory cytokine, that can be detected in the tears of patients. It would serve as a compact, accessible tool for primary care physicians, allowing rural patients to undergo **cost-effective and prompt screening**.

Problem, Need Statement and Need Criteria

- Diabetic retinopathy is the leading cause of blindness and a common microvascular complication of diabetes; it has been proven that 40.3% of American adults with diabetes over the age of 40 years have diabetic retinopathy
- Screening rates remain low at 54.1% even for patients with Medicare
- ***A cost-effective way for all diabetics, but especially rural diabetics, to receive early screening of diabetic retinopathy in order to decrease incidence of diabetic retinopathy-induced vision loss.***
- There needs to be higher than 75% accuracy, inclusiveness across different backgrounds of people, accessible for people who are not able to visit the doctor often, lower cost than existing solutions by at least 10%, safety, and easy to use.

Solution

- Our solution is a tool that uses tear-based protein analysis through rapid-ELISIA. Tears are analyzed for VEGF concentration to determine risk of diabetic retinopathy. Recent papers have shown promising data for VEGF in determining diabetic retinopathy risk.

Prototype of our tool here:
(larger view in second page)

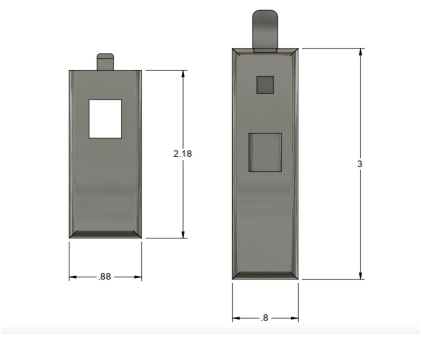

Competitive Landscape

- AI, optical coherence tomography (OCT), and fluorescein angiography uses dye and a camera to see the blood vessels; requires opthamologists to be able to do it.

- Difficulties accessing ophthalmologist → Often no diagnosis of diabetic retinopathy

- Retina Labs eye imaging for primary care provider; fails to be useful without proper training.

Value

- In DR, early detection and treatment is of vital importance as it may prevent vision loss and blindness

- Payers: Health insurance companies, Gov. programs, NGOs and Foundations, Philanthropic Orgs, Corporate Social Responsibility Programs, and Healthcare Providers and clinics

- The global DR Market was valued at $8.4 billion In 2023 and is projected to reach $13 to 17 billion by 2030.

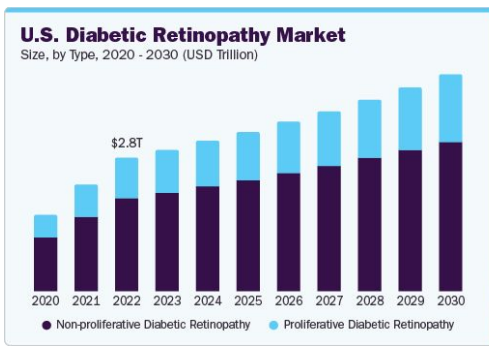

Future Milestones

- Using a VEGF specific Elisa kit to test the accuracy of the biomarker and putting our concept into practice

- Conducting trials and interviews with a fully developed and functional model, gaining insights into the application of the model to real-life and modifying the concep
stakeholder feedback

Team:
Dev Gopal, Siena Rojas, Yashaswi Bista, Jenny Youm, Jason Kyauk, Alex Rottman, Giordana Montes

Need Coaches, Mentors:
Dr. Richard Fan, Urology
Dr. Matthew Callaghan, Surgery
Dr. Hassan Jahanandish, Urology
Dr. David Myung, Ophthalmology

Retinac

"Revolutionizing diabetic retinopathy screening"

Visual Abstract

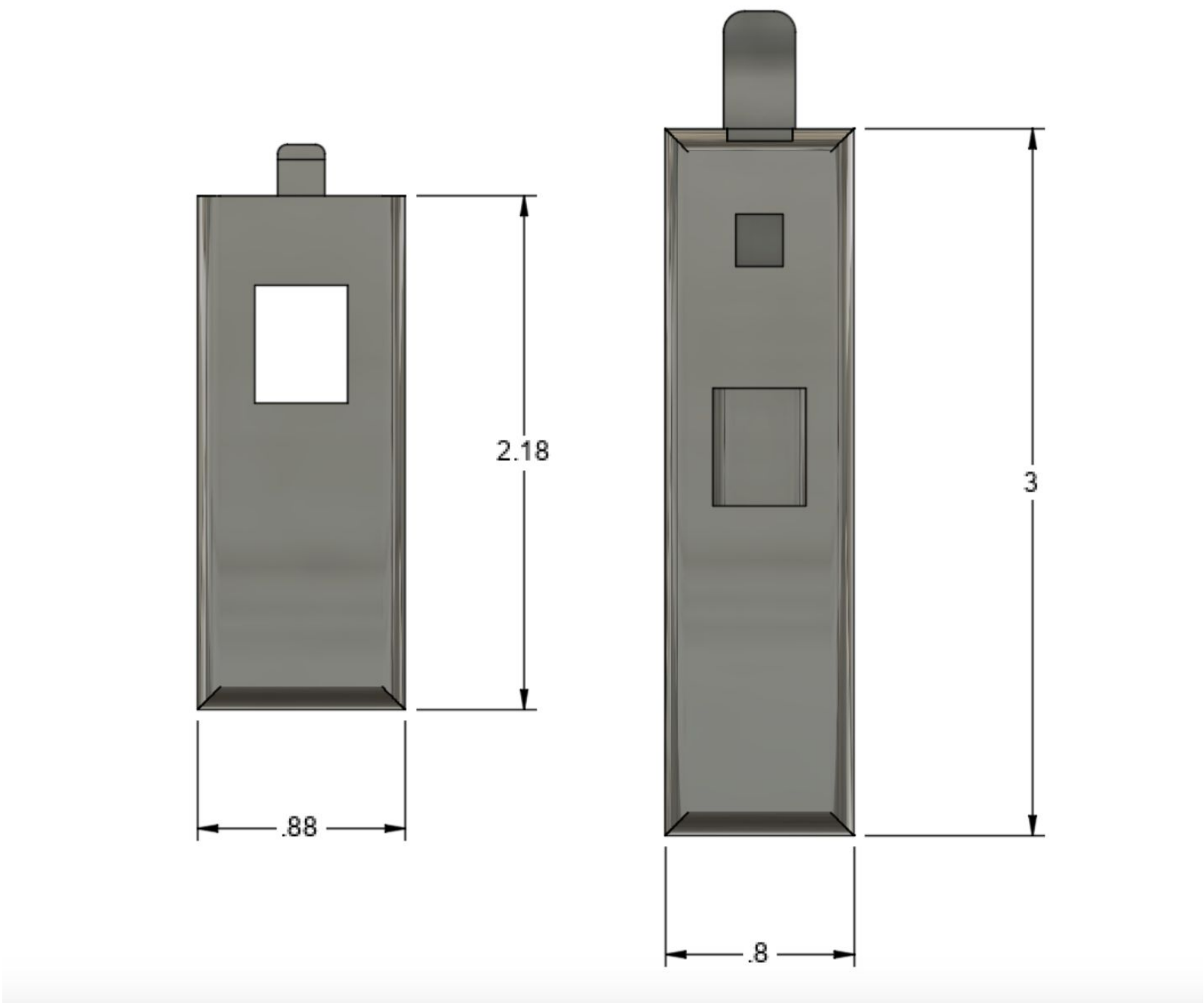

References

- "Diabetic Retinopathy Market Size, Share & Trends Analysis Report By Type (Proliferative DR, Non-proliferative DR), By Management (Anti-VEGF Therapy, Vitrectomy), And Segment Forecasts, 2024 - 2030." *Grand View Research* pp. 1,120. 2023,.grandviewresearch.com/industry-analysis/diabetic-retinopathy-market
- Shelton, Ryan L et al. "Optical coherence tomography for advanced screening in the primary care office." *Journal of biophotonics* vol. 7,7 (2014): 525-33. doi:10.1002/jbio.201200243
- Ashraf, Mohamed et al. "Potential impact of fluorescein angiography as a primary imaging modality in the management of diabetic retinopathy." *Indian journal of ophthalmology* vol. 70,10 (2022): 3579-3583. doi:10.4103/ijo.IJO_641_22
- Vashist P, Singh S, Gupta N, Saxena R. Role of early screening for diabetic retinopathy in patients with diabetes mellitus: an overview. Indian J Community Med. 2011 Oct;36(4):247-52. doi: 10.4103/0970-0218.91324.
- Witkin, A., & Salz, D. (2015). Imaging in diabetic retinopathy. Middle East African Journal of Ophthalmology, 22(2), 145. https://doi.org/10.4103/0974-9233.151887
- "Diabetic Eye Exams for Primary Care Practices." *Retina Labs,* 27 May 2024, retina-labs.com/solutions/teleretinal-screening/#:~:text=iVision%20provides%20a%20structured%2C%20workflow,component%20of%20routine%20diabetic%20care. Accessed 03 June 2024.
- "VEGF Human Elisa Kit." VEGF Human ELISA Kit - Invitrogen, www.thermofisher.com/elisa/product/VEGF-Human-ELISA-Kit/KHG0111.
- "Diabetic Retinopathy Market Size and Share Report, 2030." *Diabetic Retinopathy Market Size And Share Report, 2030*, www.grandviewresearch.com/industry-analysis/diabetic-retinopathy-market. Accessed 3 June 2024.